OPERATIONAL GOVERNANCE NEWSLETTER

The Ghost in the Machine: How to Prove Robotics are Safe Before They Exist

Bridging physical automation risks with digital twin simulation evidence.

AI Safety · Digital Twin · Compliance · Automation

> The newsletter for leaders who prefer pre-emptive safety diagnosis over reactive certification.



What is the core problem with modern automation?

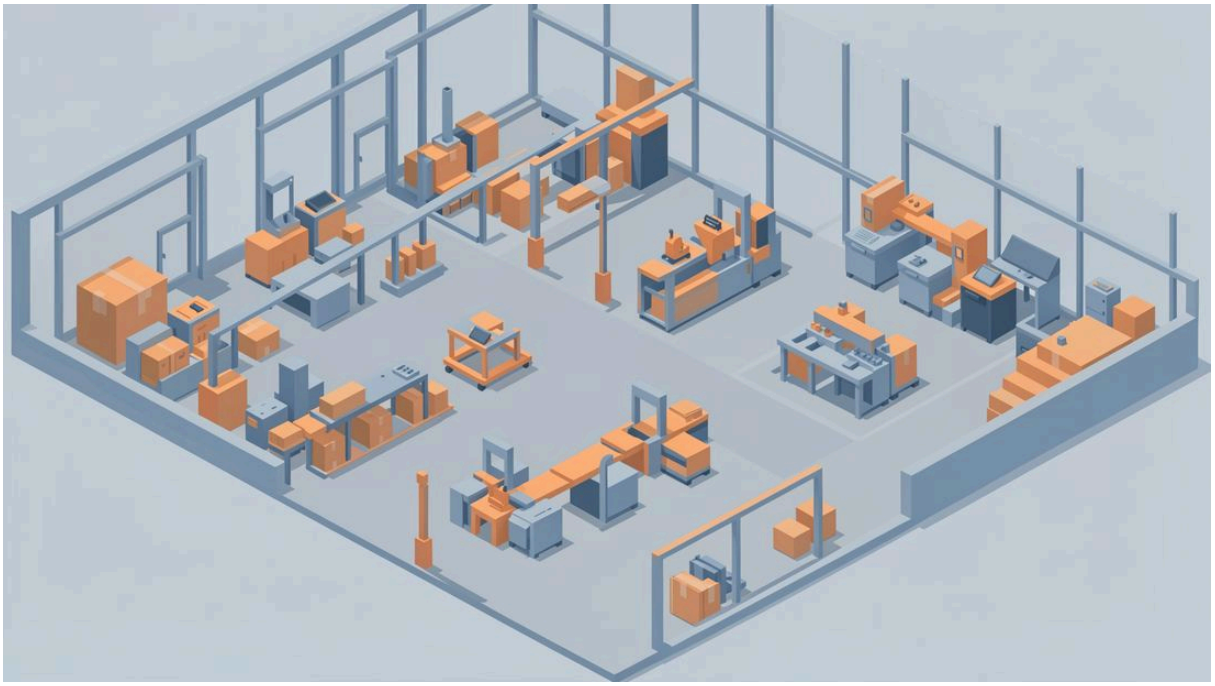

I’ve spent enough time walking production lines to know that "safe" usually means a robot can do its job without hitting a human or tripping a circuit breaker. For years, we managed this by building cages and hard-coding movements. If the arm moved from point A to point B in a fixed arc, it was safe because it couldn't do anything else.

But that era of simple automation is closing. We are moving into an age where robots aren't just repeating motions; they are making decisions. They use sensors to navigate around obstacles, adjust their grip based on part weight, and react to changing floor conditions in real-time. This is a massive leap forward for throughput, but it creates what I call a governance bottleneck.

The core problem is that our traditional methods of "proving" safety—physical trials and manual inspections—cannot keep pace with the complexity of these systems. If you want to prove a robot won't malfunction in every possible scenario on a chaotic shop floor, you can’t just run it for ten hours and call it a day. There are too many variables: different light levels, varying material textures, erratic human movements, and sensor noise. We are trying to use 20th-century "test and see" tactics to validate 21st-century autonomous behavior. When the complexity of the machine outpaces our ability to physically test every possible permutation, we end up with a dangerous gap where we *hope* it works because it worked yesterday.

The Simulation Gap: Why field proof isn't enough

There is a common trap in manufacturing right now: the belief that if you can run a new piece of equipment for a week without an incident, you have "validated" it. In most cases, this is a false sense of security.

A successful trial on the floor is not proof of safety; it is merely a record of one specific set of conditions occurring successfully. The danger lies in the edge cases—the 1% of events that happen once

every three months but have the potential to cause a catastrophic failure or a line-stopping event. On a live production floor, you cannot safely "test" an edge case that involves a high-speed collision or a structural failure just to see if your software handles it correctly. You can't afford to break the machine to prove the machine won't break.

This is where the Digital Twin moves from being a "nice-to-have" visualization tool to a fundamental requirement for quality assurance. A digital twin isn't just a 3D model of your robot; it is a physics-based simulation that allows you to stress-test the logic before a single motor turns on in the real world. It allows us to simulate "what if" scenarios—like a sensor failing at peak load or an operator entering a zone unexpectedly—without risking a single person's safety or any hardware. If you aren't using simulation to find where the system fails, you are essentially waiting for the floor to tell you what should have been caught in the virtual environment.

How do we audit a virtual process? The Hybrid Assurance Model

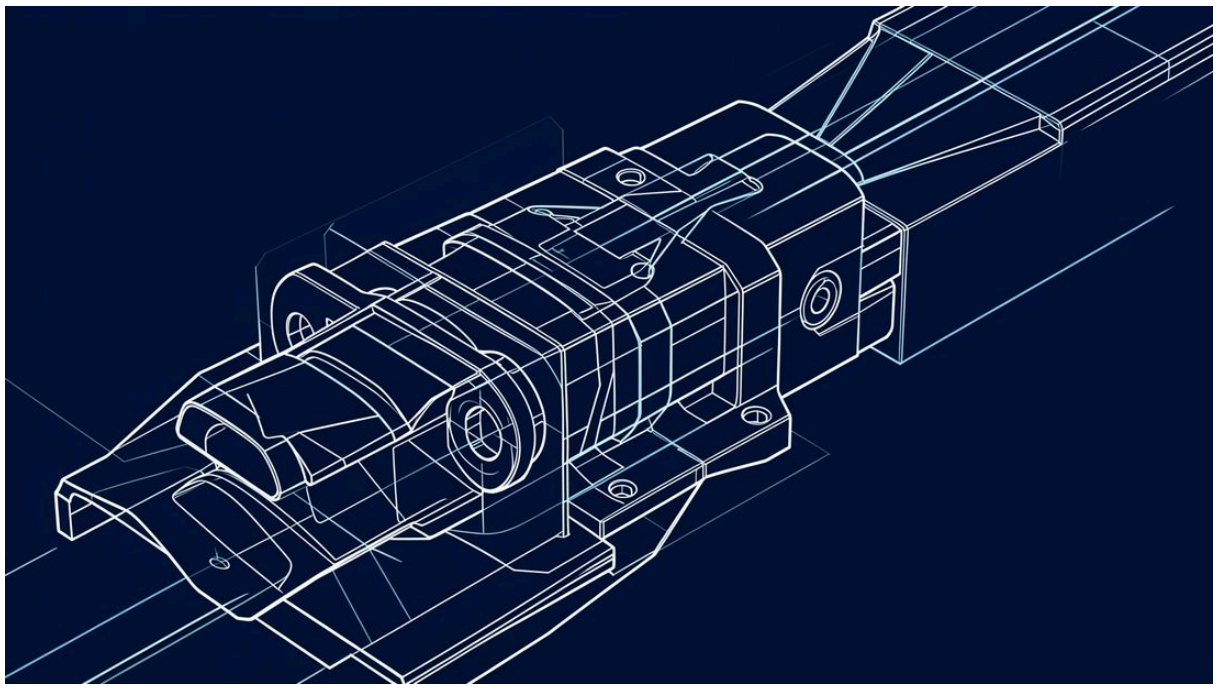

When we move into this space, we face a new hurdle: how do you actually "audit" something that only exists in a computer? We can't just walk the line and check a box. To solve this, we need to move toward a Hybrid Assurance Model.

This means shifting our governance from "did it work during the test?" to "can you prove the simulation accurately reflects physical reality?" You have to bridge the gap between digital evidence and shop-floor physics. This requires combining human expertise—the seasoned operator who knows how that material actually behaves under heat—with high-fidelity simulation data.

We are currently seeing a massive **Certification Lag**. Our standards, like ISO 3691-4, are struggling to keep up with the pace of physical AI integration. To stay ahead, leaders need to stop waiting for these standards to be perfectly updated and start building their own internal hybrid framework. You must

verify that the digital twin's parameters (friction coefficients, motor torque limits, sensor latency) match your actual floor conditions.

Traditional Assurance	Hybrid Assurance Model
Primary Evidence: Physical trial runs and "run-off" tests.	**Primary Evidence:** Simulation stress-tests + physical validation of model accuracy.
Risk Management: Reactive; identify failures after they occur on the floor.	**Risk Management:** Preemptive; identify failure modes in a virtual environment.
Documentation: Observation logs and manual checklists.	**Documentation:** Simulated "failure maps" and verified digital twin parameters.
Audit Focus: Did the machine perform as expected today?	**Audit Focus:** Does the simulation accurately predict all known edge cases?

What does poor assurance cost? The risk of unproven integration

The stakes here aren't just about high-level "risk." They are about what happens at 3:00 AM on a Tuesday when something goes wrong. When we rush an autonomous system onto the floor without rigorous simulation, we invite three specific types of costs.

First is **unpredictable downtime**. If the robot encounters a scenario it wasn't trained for—a "ghost" in its logic—it might enter an error state that requires a manual reset or even a full system reboot. This isn't just a pause; it’s a breakdown of your production flow because the machine didn't have a pre-validated path forward.

Second is **rework and scrap**. A robot making "decisions" on its own might slightly vary its application of force or heat over time as it adapts to floor conditions. Without simulation to define those boundaries, you may find that your first-pass yield starts to drift because the machine's "adaptive behavior" isn't aligned with your quality specs.

Finally, and most importantly, is **safety incidents**. This is where the cost becomes public and permanent. If a system hasn't been stress-tested against every possible human interaction in a virtual environment first, it is only a matter of time before a real-world collision occurs. A "near miss" on the floor is an expensive lesson; a real accident is a tragedy that no amount of "fast innovation" can justify.

Four steps to build a robust assurance system



If you want to move from reactive testing to proactive assurance, you need a repeatable process. You cannot simply hand this off to the IT department or a third-party vendor and hope they do it right. It must be anchored in your quality management system.

1. Define the Physical Boundaries

Before you open any software, you must define exactly what the robot is allowed to do and where those limits are. What are the maximum speeds? What are the torque limits? What are the "no-go" zones for human interaction? These physical constraints must be documented as hard requirements that the simulation is forced to respect.

2. Model in the Digital Twin

Create a high-fidelity mirror of your process. This isn't just about making it look like the floor; it’s about ensuring the physics are accurate. If the friction on the conveyor belt is different in reality than in the model, your simulation results will be useless. You must "calibrate" your digital twin against real-world measurements before you trust its output.

3. Stress Test and Identify Failure Modes

This is where the heavy lifting happens. Instead of running one successful path, run a thousand failures. Simulate sensor degradation, power fluctuations, and unexpected obstacles. Use this phase to identify "failure modes"—specific conditions where the robot's logic breaks down. You are looking for the points where the machine makes an incorrect decision or enters an unsafe state.

4. Update Standard Work Based on Simulation

The final output of your simulation shouldn't be a PDF report that sits in a folder; it should be updated standard work. If the simulation shows that a specific sensor failure leads to a dangerous robot

movement, your reaction plan must include a manual override or an automated "safe-state" trigger. Use the data from the virtual world to write the rules for the physical floor.

Getting this done starts with your audit checklist tomorrow

You don't need a PhD in robotics to start tightening up your assurance process. On your next plant visit, I want you to look for these four things:

1. **The "Why" of Validation:** Ask the project lead: "How did we test the edge cases that we couldn't safely replicate on the live line?" If the answer is "we didn't," you have a gap.
2. **Model Calibration:** Ask to see the parameters for their digital twin or simulation model. Compare those numbers—torque, speed, latency—against what is actually written on the machine’s spec sheet. Do they match?
3. **The Failure Map:** Ask for a list of identified failure modes from the simulation phase. If they don't have one, they haven't done enough work to prove the system is safe.
4. **Reaction Plans:** Walk to the machine and find the reaction plan taped to the station or stored in the binder. Does it account for the specific autonomous behaviors we identified in the simulation?

Stop trying to "test" your way out of complexity. Start simulating it, validating the model, and anchoring the results in standard work that actually protects your people and your production.

Call to Action

What gaps in your current process are forcing you to wait for field failure? Share your thoughts below or send us an anonymous question at newsletter@sixsigmakaizen.com

Newsletter replies: newsletter@sixsigmakaizen.com · X: @kaizen6sigma

Stay curious, stay improving,

David Rodgers
SixSigmaKaizen.com

References: ISO 3691-4 (General standards on robotics); TÜV SÜD/Accenture Simulation Models; Cost of Poor Quality in Automation Failure